MANUFACTURED & TESTED IN THE USA

THE BEST QUALITY • THE FASTEST DELIVERY

PWM

API 610 BB3 Multistage Pump

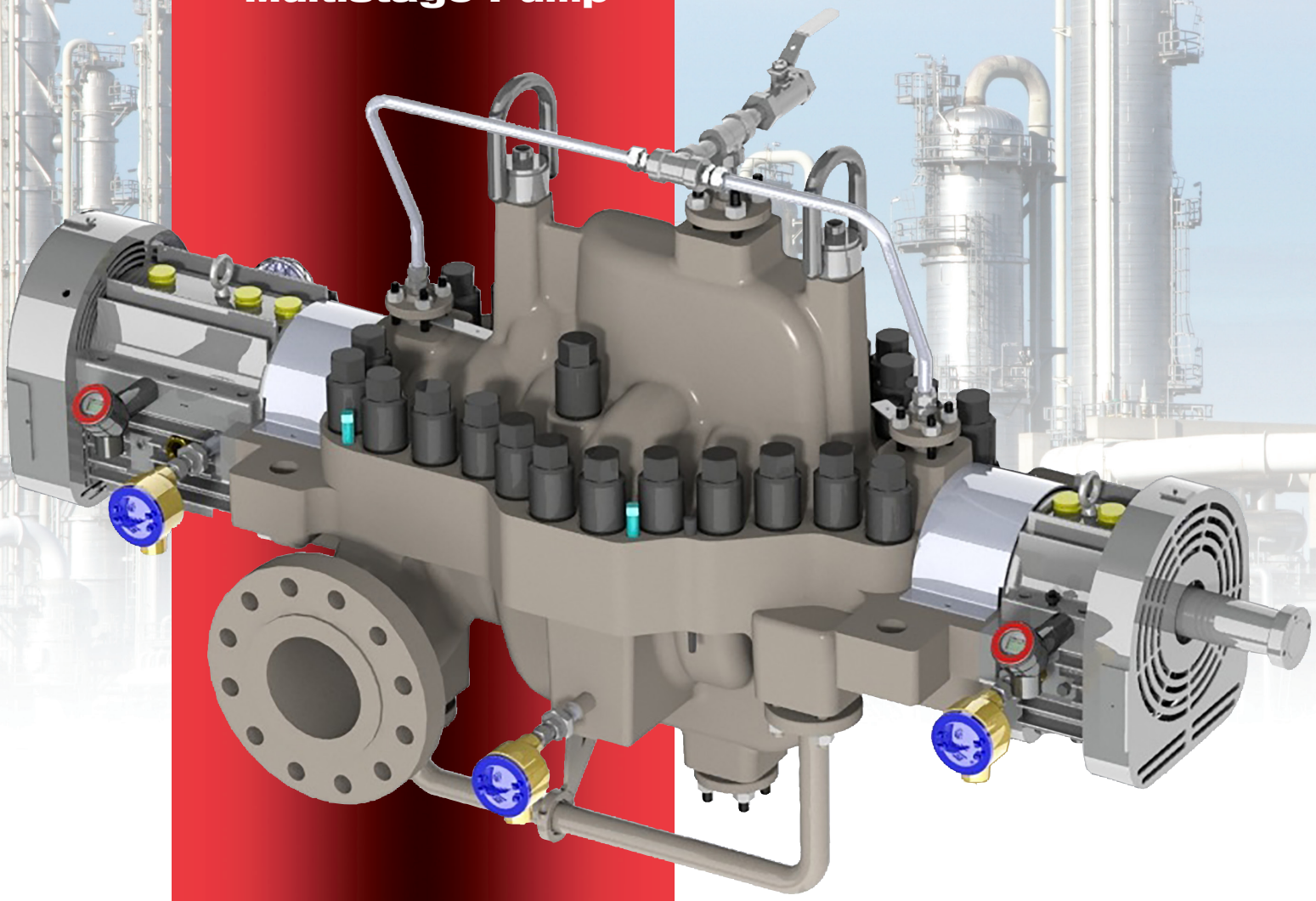

PumpWorks™

HYDRAULIC PERFORMANCE COVERAGE

60 Hz Performance Coverage

Visit our web site at **www.pumpworks.com** and specify flow and performance needs and obtain pump selection, performance curve, drawing, and data sheet.

ePOD ELECTRONIC PUMP ON DEMAND

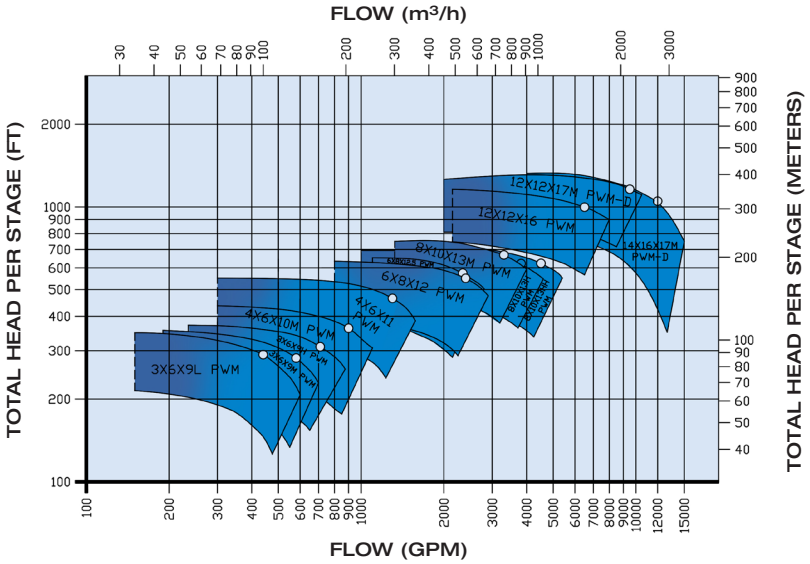

Performances shown are normal and are to be used for preliminary selection only.

50 Hz Performance Coverage

Visit our web site at **www.pumpworks.com** and specify flow and performance needs and obtain pump selection, performance curve, drawing, and data sheet.

ePOD ELECTRONIC PUMP ON DEMAND

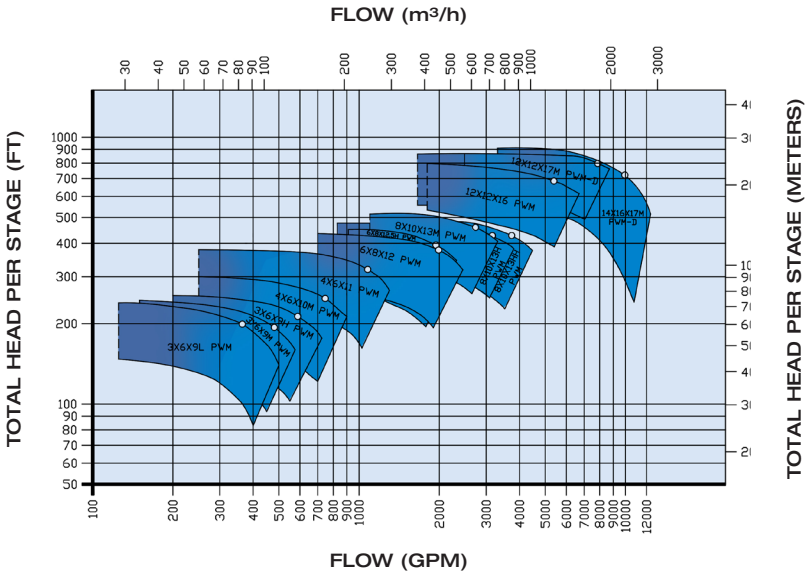

STANDARD MATERIALS OF CONSTRUCTION

API MATERIAL CLASS	S-4	S-6	S-8	C-6	A-8
CASING	A-216 GRADE WCB	A216 GRADE WCB	A216 GRADE WCB	A487 GRADE CA6NM	A351 GRADE CF3M
IMPELLER	A-216 GRADE WCB	A487 GRADE CA6NM	A743 GRADE CF3M	A743 GRADE CA6NM	A743 GRADE CF3M
SHAFT	ASTM A276 TYPE 410 SS	ASTM A276 TYPE 410 SS	A479 TYPE XM-19	A276 TYPE 410 SS	A479 TYPE XM-19
BEARING HOUSING	GRADE WCB	A216 GRADE WCB CARBON STEEL	A216 GRADE WCB	A216 GRADE WCB	A216 GRADE WCB
IMPELLER WEAR RINGS	CAST IRON	262-302 BHN: 410 SS HT	316 SS HARD FACED	410 SS HT; 255-302 BHN	316 SS HARD FACED
CASING WEAR RINGS	CAST IRON	400-450 BHN: 420 SS HT	316 SS HARD FACED	420 SS: 400-450 BHN	316 SS HARD FACED
THROAT BUSHING	CAST IRON	410 SS HT: 262-302 BHN	316 SS HARD FACED	410 SS HT; 255-302 BHN	316 SS HARD FACED
CASING STUDS	A-193 GRADE B-7	A193 GRADE B-7	A193 GRADE B-7	A193 GRADE B-7	A193 GRADE B-7
CASING NUTS	A-194 GRADE 2H	A194 GRADE 2H	A194 GRADE 2H	A194 GRADE 2H	A194 GRADE 2H

**Other API 610 Material Classes and Combinations are available including D-1 and D-2.*

DESIGN FEATURES AND BENEFITS

Bearing Housing
- Finned design improves heat dissipation for cooler running bearing
- Large bearing housing easily accommodates vibration switches, transmitters and proximity probes
- Optional sleeve bearing designed to handle variety of RTDs

Seal Chamber
- API 610 seal chamber allows user to install any API 682 cartridge seal to meet process requirements
- Renewable throat bushing for controlled seal chamber environment
- Optional water cooled stuffing box for high process temperature application

Renewable Wear Rings
- All wear rings are replaceable permitting re-establishing initial running clearances and efficiency

Double Volute
- Precision cast hydraulic passageways minimizes radial thrust for less shaft deflection and bearing loading

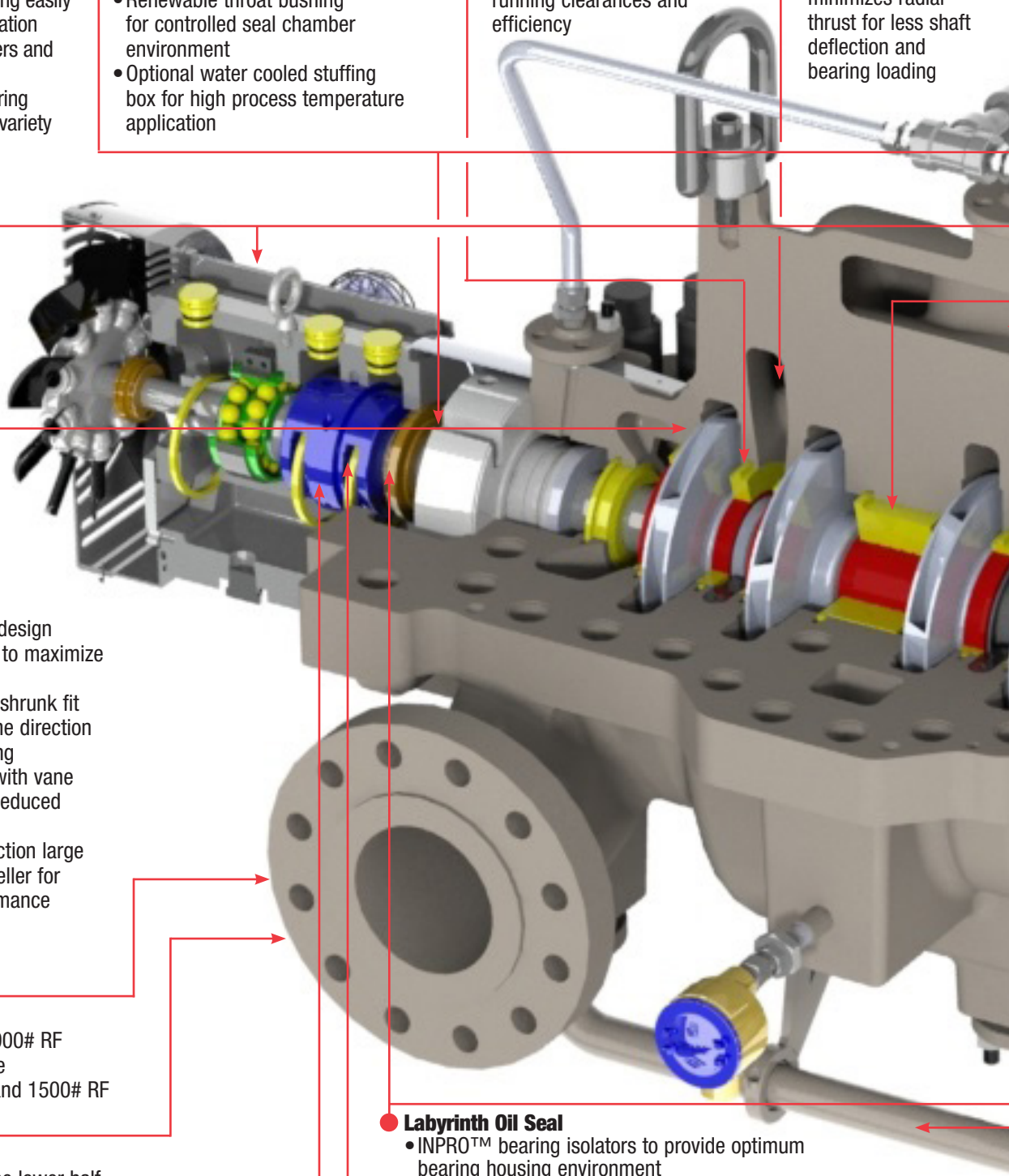

Quality
- Manufactured and tested in the USA

Impeller
- Precision cast for maximum efficiency
- Dynamically balanced to 4W/N before mounting
- Opposing impeller design to limit axial thrust to maximize thrust bearing life
- Individually keyed, shrunk fit and restrained in the direction of thrust by split ring
- Mounted on shaft with vane tips staggered for reduced pressure pulsation
- Optional double suction large eye first stage impeller for lower NPSH performance

Flanges
- ANSI B16.5 Class 900# RF suction & discharge
- Optional 600# RF and 1500# RF

Nozzles
- Cast integrally in the lower half casing, permitting disassembly without disturbing piping connections

Labyrinth Oil Seal
- INPRO™ bearing isolators to provide optimum bearing housing environment

Bearing Lubrication
- Ring oil lubrication to ensure effective lubrication
- Optional pure or purge mist lubrication

PWM API 610 CONSTRUCTION
BB3 MULTISTAGE PUMP

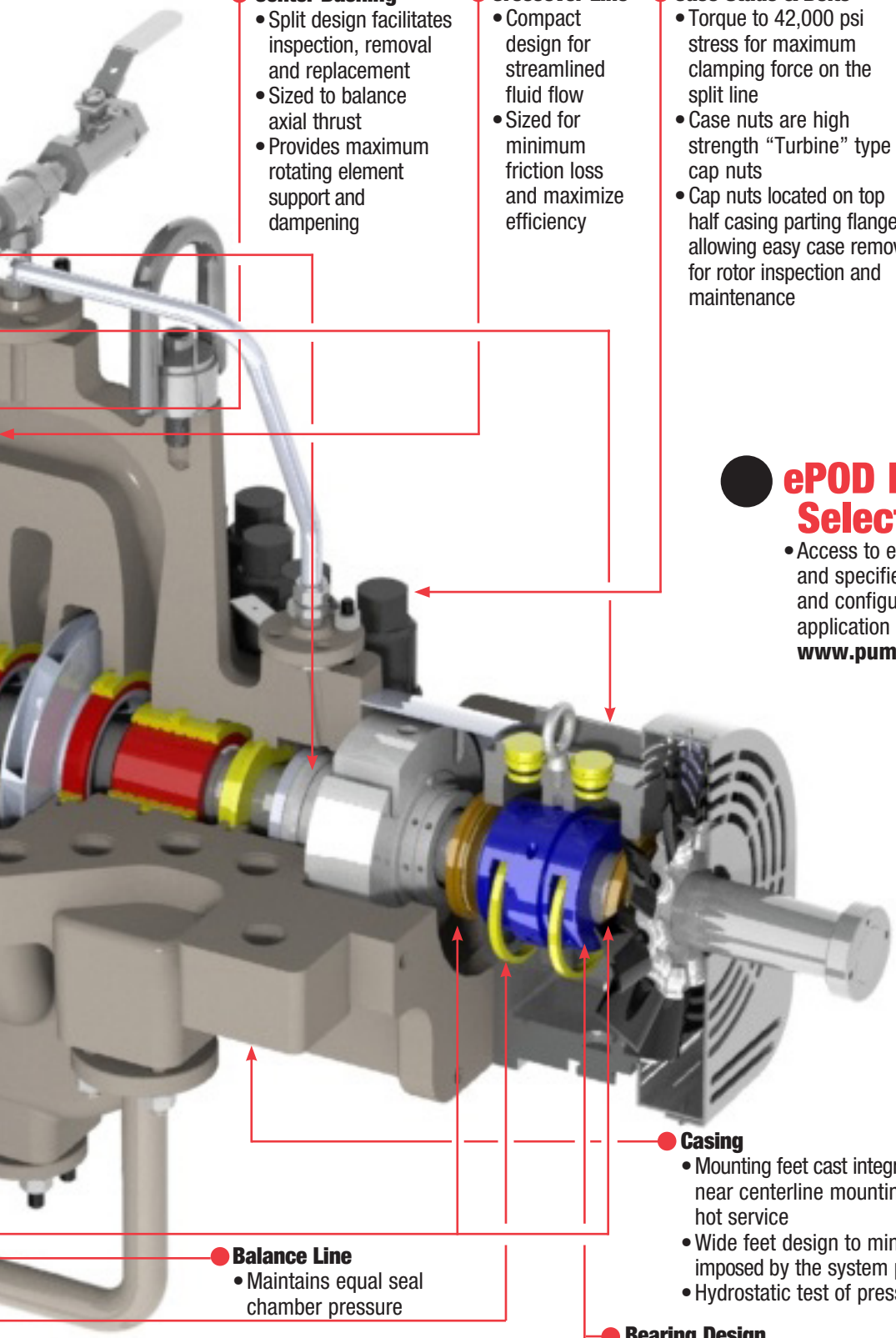

Center Bushing
- Split design facilitates inspection, removal and replacement
- Sized to balance axial thrust
- Provides maximum rotating element support and dampening

Crossover Line
- Compact design for streamlined fluid flow
- Sized for minimum friction loss and maximize efficiency

Case Studs & Bolts
- Torque to 42,000 psi stress for maximum clamping force on the split line
- Case nuts are high strength "Turbine" type cap nuts
- Cap nuts located on top half casing parting flange allowing easy case removal for rotor inspection and maintenance

Delivery
- 26 weeks for API 610 material class S-4, S-6, S-8, C-6 and A-8
- Refer to the factory on deliveries for other API material classes and customer specific material combinations

ePOD Pump Selector
- Access to end users and specifiers to select and configure your pump application on line at **www.pumpworks.com**

Casing
- Mounting feet cast integral into the bottom half providing near centerline mounting to minimize thermal growth in hot service
- Wide feet design to minimize affects of forces and moments imposed by the system piping
- Hydrostatic test of pressure containing parts to 1.5 MAWP

Balance Line
- Maintains equal seal chamber pressure

Bearing Design
- Ball / Ball
- Optional Sleeve / Ball
- Optional Sleeve / Kingsbury

OUTLINE DIMENSIONS

SIZE	INDEPENDENT OF ROTATION								CCW - STD		*CW		BASEPLATE			Weights	
	Stages	A	B	C	D	E	F	*G	H	I	H	I	J	K	L	Pump	**Skid
3x6x9	3	14.50	14.00	7.50	6.50	13.25	13.25	8.00	34.63	32.63	30.88	36.38	69.5	32.5	165.0	1650	4500
	4							12.00	34.63	36.63	34.88	36.38			169.0	1925	4550
	5							12.00	38.63	36.63	34.88	40.38			173.0	2200	4600
	6							16.00	38.63	40.63	38.88	40.38			177.0	2475	4650
	7							16.00	42.63	40.63	38.88	44.38			181.0	2750	4700
	8							20.00	42.63	44.63	42.88	44.38			185.0	3025	4775
	9							20.00	46.63	44.63	42.88	48.38			189.0	3300	4850
	10							24.00	46.63	48.63	46.88	48.38			193.0	3575	4900
	11							24.00	50.63	48.63	46.88	52.38			197.0	3850	4950
	12							28.00	50.63	52.63	50.88	52.38			201.0	4125	5000
	13							28.00	54.63	52.63	50.88	56.38			205.0	4400	5075
	14							32.00	54.63	56.63	54.88	56.38			209.0	4675	5150
4x6x10	3	17.00	17.00	8.00	8.00	14.50	14.50	8.00	36.25	34.13	32.50	37.88	69.5	34.0	168.5	2700	4650
	4							12.50	36.25	38.63	37.00	37.88			172.0	2950	4700
	5							12.50	40.75	38.63	37.00	42.38			176.5	3200	4750
	6							17.00	40.75	43.13	41.50	42.38			181.0	3450	4825
	7							17.00	45.25	43.13	41.50	46.88			185.5	3700	4900
	8							21.50	45.25	47.63	46.00	46.88			190.0	3950	4950
	9							21.50	49.75	47.63	46.00	51.38			194.5	4200	5050
	10							26.00	49.75	52.13	50.50	51.38			199.0	4450	5100
	11							26.00	54.25	52.13	50.50	55.88			203.5	4700	5150
	12							30.50	54.25	56.63	55.00	55.88			208.0	4950	5225
	13							30.50	58.75	56.63	55.00	60.38			212.5	5200	5300
	14							35.00	58.75	61.13	59.50	60.38			217.0	5450	5350
4x6x11	3	17.00	17.00	8.00	8.00	16.00	15.00	9.75	37.38	35.00	34.13	38.25	69.5	36.0	169.5	2550	4750
	4							14.50	37.38	39.75	38.88	38.25			174.0	2920	4800
	5							14.50	42.13	39.75	38.88	43.00			179.0	3290	4900
	6							19.25	42.13	44.50	43.63	43.00			183.5	3660	4950
	7							19.25	46.88	44.50	43.63	47.75			188.5	4030	5000
	8							24.00	46.88	49.25	48.38	47.75			193.0	4400	5100
	9							24.00	51.63	49.25	48.38	52.50			198.0	4770	5200
	10							28.75	51.63	54.00	53.13	52.50			202.5	5140	5250
	11							28.75	56.38	54.00	53.13	57.25			207.5	5510	5300
	12							33.50	56.38	58.75	57.88	57.25			212.0	6320	5375
6x8x12	3	18.00	18.00	8.50	8.50	19.00	18.00	9.50	41.50	35.75	34.75	42.50	69.5	36.0	174.0	3500	4800
	4							15.25	41.50	41.50	40.50	42.50			180.0	4000	4900
	5							15.25	47.25	41.50	40.50	48.25			185.5	4500	4975
	6							21.00	47.25	47.25	46.25	48.25			191.5	5000	5075
	7							21.00	53.00	47.25	46.25	54.00			197.0	5500	5150
	8							26.75	53.00	53.00	52.00	54.00			203.0	6000	5250
	9							26.75	58.75	53.00	52.00	59.75			208.5	6500	5350
	10							32.50	58.75	58.75	57.75	59.75			214.5	7000	5400
	11							32.50	64.50	58.75	57.75	65.50			220.0	7500	5500
	12							38.25	64.50	64.50	63.50	65.50			226.0	8000	5600
6x8x12.5	3	20.00	19.00	10.00	10.00	19.00	19.00	9.50	46.38	38.63	39.13	45.88	69.5	36.0	182.0	3125	4925
	4							16.00	46.38	45.13	45.63	45.88			188.5	4050	4950
	5							16.00	52.88	45.13	45.63	52.38			195.0	4975	5125
	6							22.50	52.88	51.63	52.13	52.38			201.5	5900	5250
	7							22.50	59.38	51.63	52.13	58.88			208.0	6825	5350
	8							29.00	59.38	58.13	58.63	58.88			214.5	7750	5400
	9							29.00	65.88	58.13	58.63	65.38			221.0	8675	5500
	10							35.50	65.88	64.63	65.13	65.38			227.5	9600	5600
8x10x13	3	22.00	21.00	10.00	10.00	23.00	21.00	9.75	46.25	39.88	38.38	47.75	69.5	42.0	183.0	6,500	5200
	4							17.63	46.25	47.75	46.25	47.75			191.0	7,500	5300
	5							17.63	54.13	47.75	46.25	55.63			199.0	8,500	5400
	6							25.50	54.13	55.63	54.13	55.63			207.0	9,500	5500
	7							25.50	62.00	55.63	54.13	63.50			215.0	10,500	5600
	8							33.38	62.00	63.50	62.00	63.50			223.0	11,500	5700
12x12x16	2	26.38	25.25	12.31	12.31	28.00	26.00	12.13	43.31	43.88	43.06	44.13	69.5	45.0	184.0	7,250	5300
	3							12.13	53.00	43.88	43.06	53.81			194.0	8,600	5450
	4							21.81	53.00	53.56	52.75	53.81			204.0	9,450	5600
12x12x17 PWM-D	2	27.00	26.75	14.50	14.50	28.75	28.75	13.75	43.00	50.19	48.38	44.81	69.5	45.5	190.0	13,000	5400
14x16x17 PWM-D	2	28.00	31.00	14.50	14.50	32.13	32.13	16.63	47.50	60.38	51.63	56.25	69.5	50.5	205	13,000	5775

PWM API 610 BB3 MULTISTAGE PUMP

OUTLINE DIMENSIONS

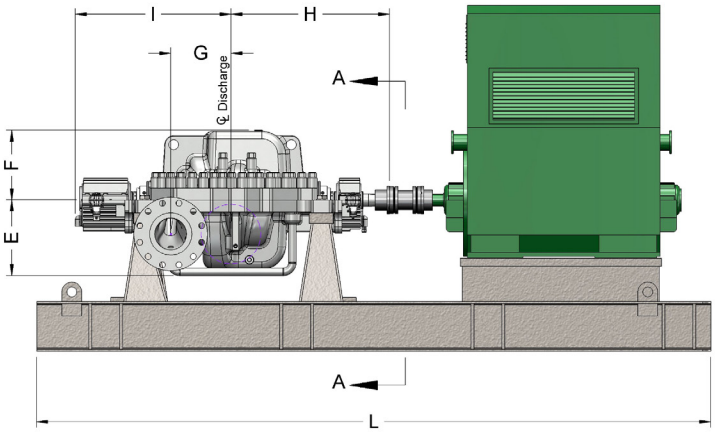

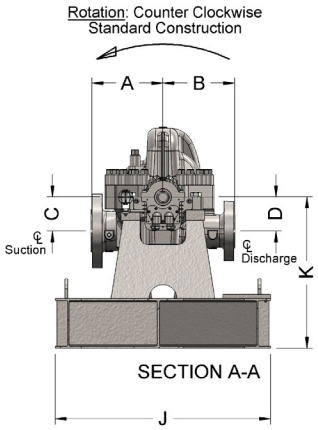

NOTES:
1. All dimensions are in inches. Dimensions are not certified for construction.
2. Standard construction flange rating 900#, except 14x16x17 PWM-D which is 600# standard rating
3. All dimensions based on sleeve bearing / ball thrust housings with fan cooling, except 14x16x17 PWM-D which is sleeve / KTB
*4. For clockwise rotation - suction and discharge are on opposite sides in Section View A-A and side view. Dimension G is toward motor from discharge centerline.
5. Dimensions "J", "K", & "L" may vary with driver selection
**6. Estimated skid weight is based on minimum length and width.

TECHNICAL DATA

PUMP SIZE	Case Min. Thick	Max. Hydro Test	STANDARD SHAFT DIMENSIONS						Ball Bearing Sizes		Sleeve Ball	Sleeve Pivot Shoe	Max. BHP/ 100 RPM	Wear Ring Dia.	Stuffing Box Dim.			Gland BC
			Imp.	Stuff. Box	Slv. Brg.	Ball Thrust Brg.	Radial Ball Brg.	Cplg.	Thrust Brg. Size	Radial Brg. Size	Thrust Brg. Size	Pivot Shoe. Size			Bore	Face to 1st Obstruction Int.	Face to 1st Obstruction Ext.	
3x6x9	.63	3350	2.69	2.635	2.625	2.166	2.559	2.44	7311	6213	7310	5 JHJ	42	5.50	5.19	3.38	3.88	6.69
4x6x10	.75	3350	2.75	2.635	2.625	2.166	2.559	2.44	7311	6213	7310	5 JHJ	42	6.00	5.19	3.38	3.88	6.69
4x6x11	.75	3350	3.06	2.885	2.875	2.166	2.559	2.44	7311	6213	7310	5 JHJ	55	6.25	5.50	3.38	3.88	7.13
6x8x12	.63	3350	3.50	3.260	3.250	2.166	2.559	2.44	7311	6213	7310	5 JHJ	80	7.13	6.31	4.50	4.00	8.00
6x8x12.5	.69	3350	3.75	3.510	3.500	2.559	3.150	3.00	7313	6216	7313	6 JHJ	100	7.88	6.31	4.50	4.88	8.00
8x10x13	.69	3350	3.38	3.260	3.250	2.559	3.150	3.00	7313	6216	7313	5 JHJ	80	8.50	6.31	4.50	4.88	8.00
12x12x16	.69	3350	4.19	3.760	3.750	2.559	---	3.75	---	---	---	6 JHJ	123	10.50	6.75	5.50	5.13	8.75
12x12x17 PWM-D	1.25	3350	4.63	4.323	4.313	---	---	4.31	---	---	---	6 JHJ	187	10.75	7.13	5.50	5.25	8.88
14x16x17 PWM-D	1.13	2200	4.75	4.510	4.500	---	---	4.50	---	---	---	7 JHJ	212	12.13	7.50	5.50	5.56	9.25

NOTES:
1. All dimensions are in inches.
2. Hydrotest pressures based on standard 900# flange rating, at 1 1/2 maximum working pressure, except 14x16x17 PWM-D which is 600# standard rating.
3. Max BHP/100 RPM based on 7500# torsional shaft stress

Typical Applications

PWM pump is designed for covering the full range of High Pressure petroleum refinery services, petrochemical plant services, gas processing, oil processing, offshore installations (platforms), hydrocarbon and crude oil pipeline and finished products pipeline services.

- Shorter lead times than the competition – 26 weeks for API 610 material class S-4, S-6, S-8, C-6 and A-8

Typical Services

Services covered but not limited by the PWM pump include:

- Boiler Feed Water
- High Pressure Water Services
- Crude Oil Pipeline
- Crude Products Pipeline
- Water Injection
- High Pressure Condensate
- Propane Transfer
- Gasoline Pipeline Service
- NGL Pipeline
- Mine Dewatering
- Water Flood
- HP Amine Circulation
- High Pressure Refinery Services

PumpWorks™
Made *Right* in the USA

ISO 9001:2008 BUREAU VERITAS Certification N° US 004662-1

PumpWorks • www.pumpworks.com
65 Southbelt Industrial Boulevard, Houston Texas 77047 . Ph. 1.888.405.0209 Fax 713.956.2141
www.pumpworks.com • twitter: @PumpWorks